2012 - Mazda6 - Body and Accessories

KEYLESS ENTRY SYSTEM WIRING DIAGRAM [ADVANCED KEYLESS ENTRY AND PUSH BUTTON START SYSTEM]

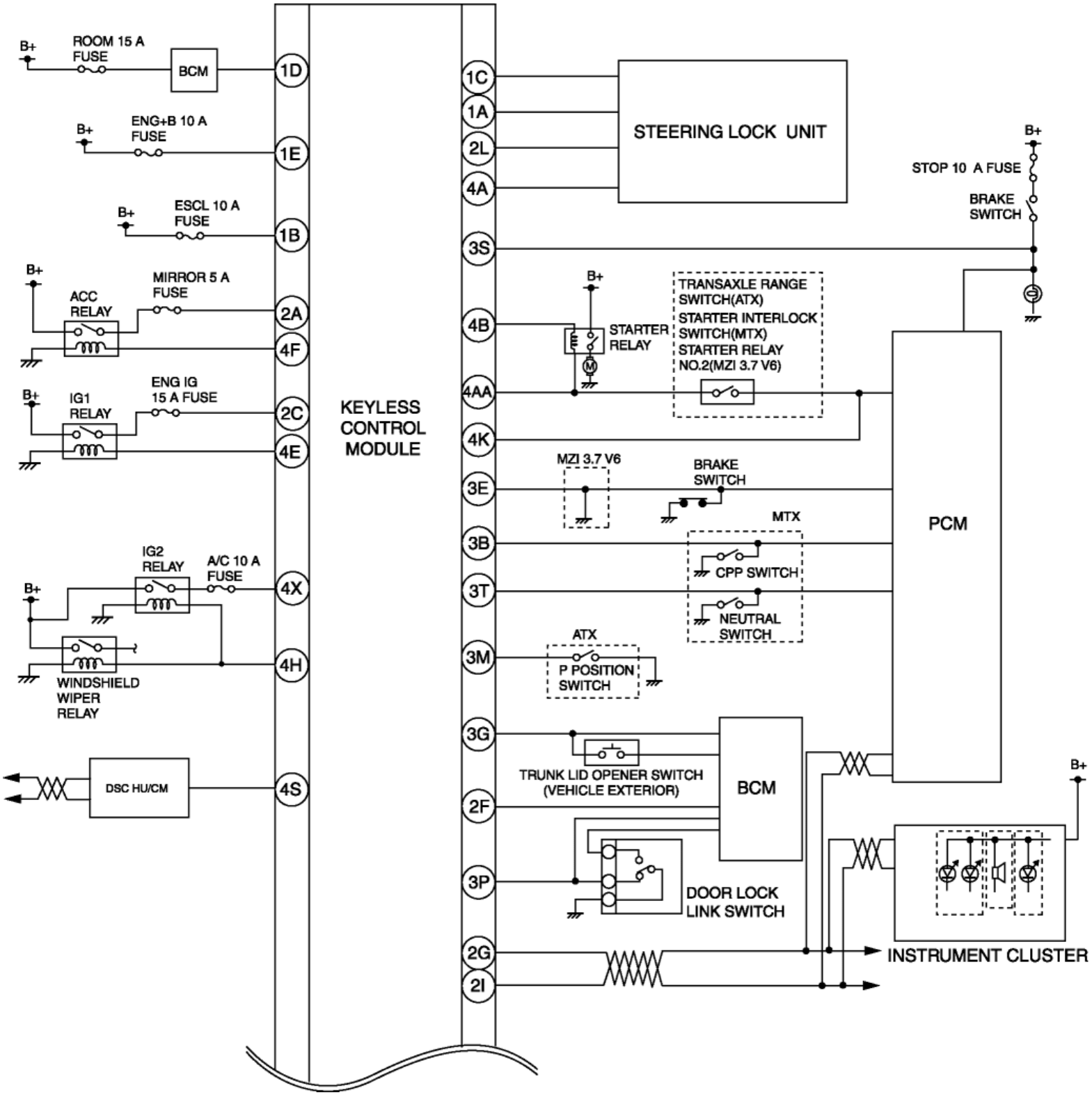

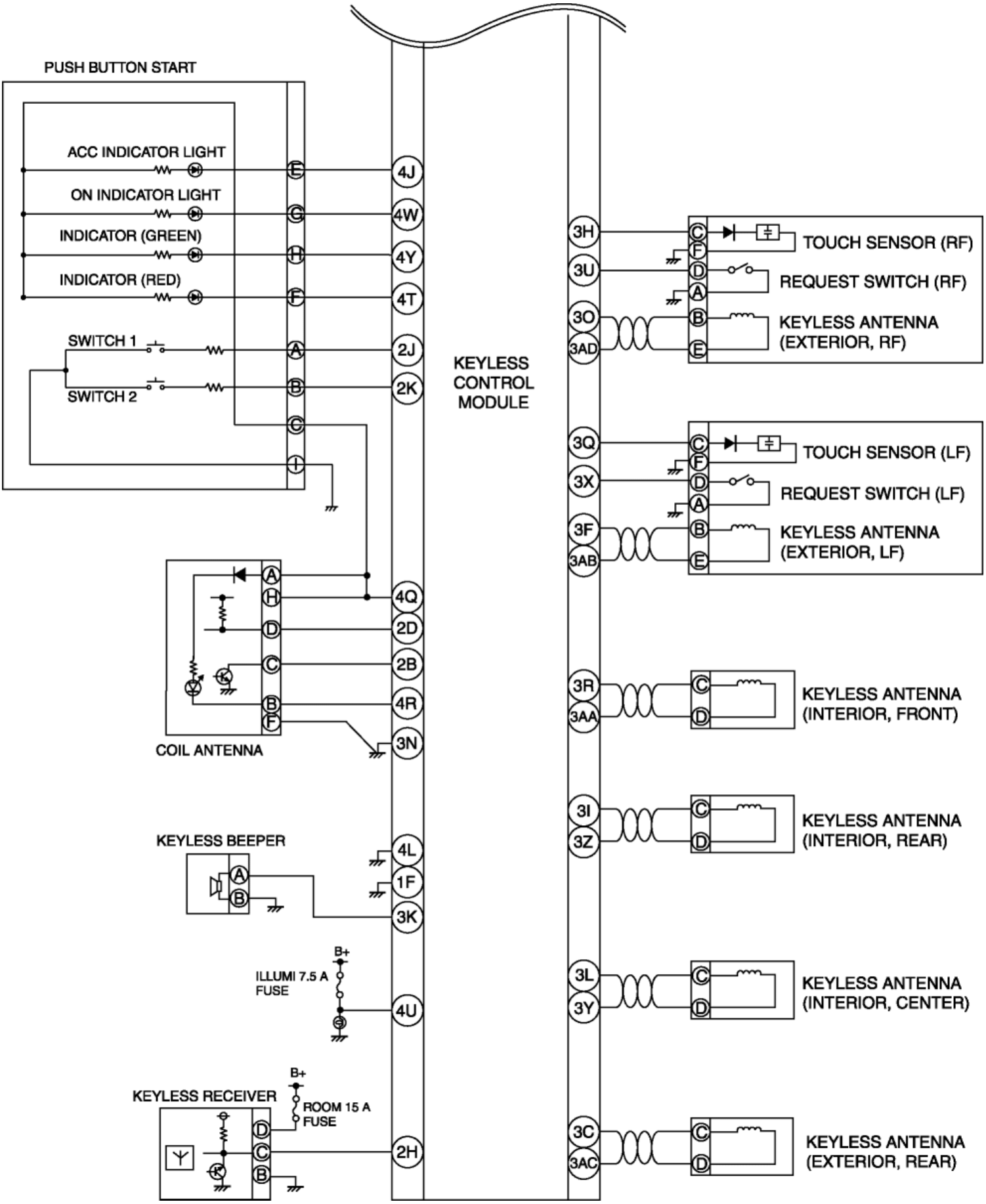

< Previous Next >

Back to Top

© 2012 Mazda North American Operations, U.S.A.

2012 - Mazda6 - Body and Accessories

KEYLESS ENTRY SYSTEM WIRING DIAGRAM [ADVANCED KEYLESS ENTRY AND PUSH BUTTON START SYSTEM]

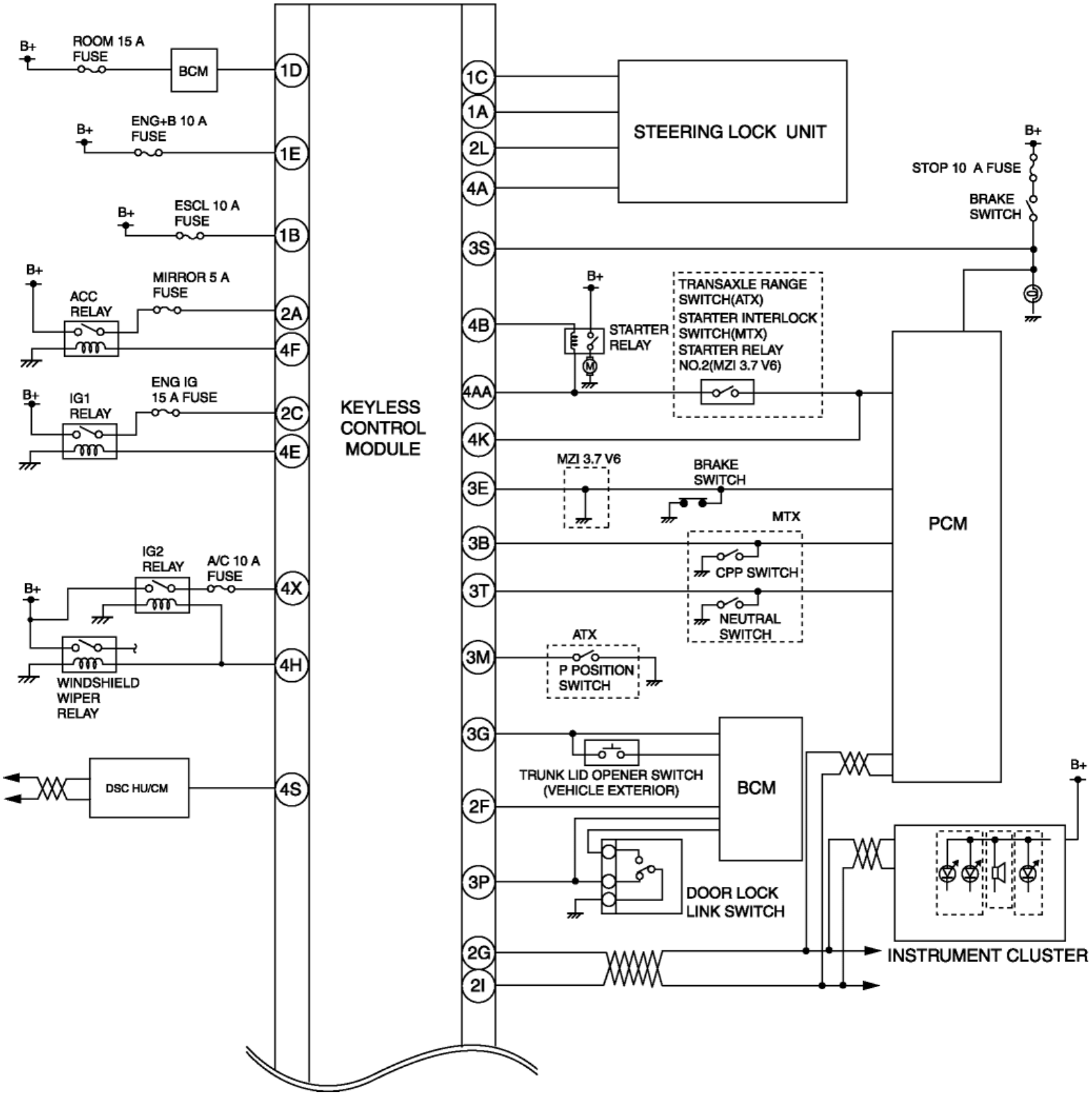

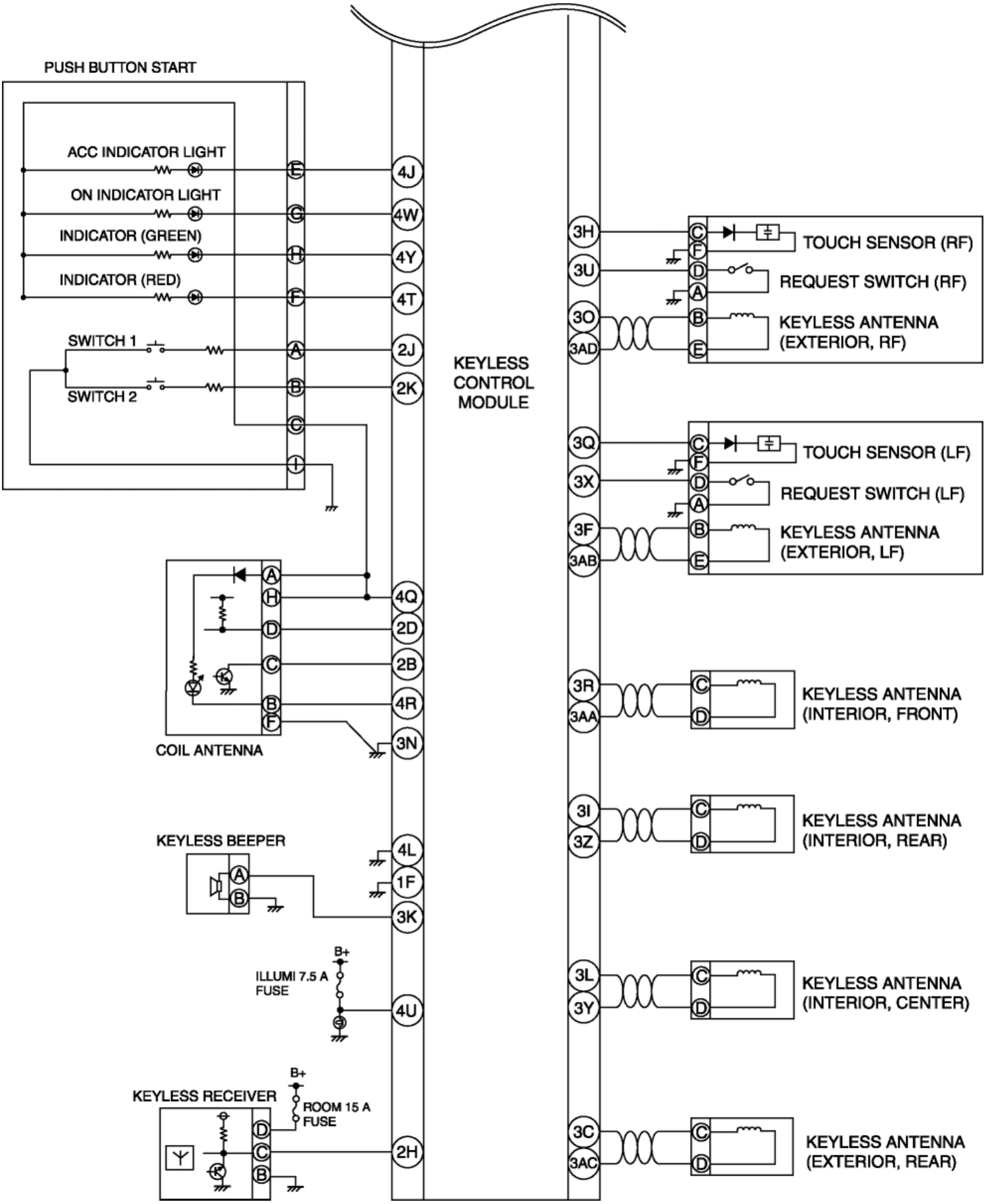

< Previous Next >

Back to Top

© 2012 Mazda North American Operations, U.S.A.