# 2012 - Mazda6 - HVAC

## HVAC SYSTEM WIRING DIAGRAM [MANUAL AIR CONDITIONER]

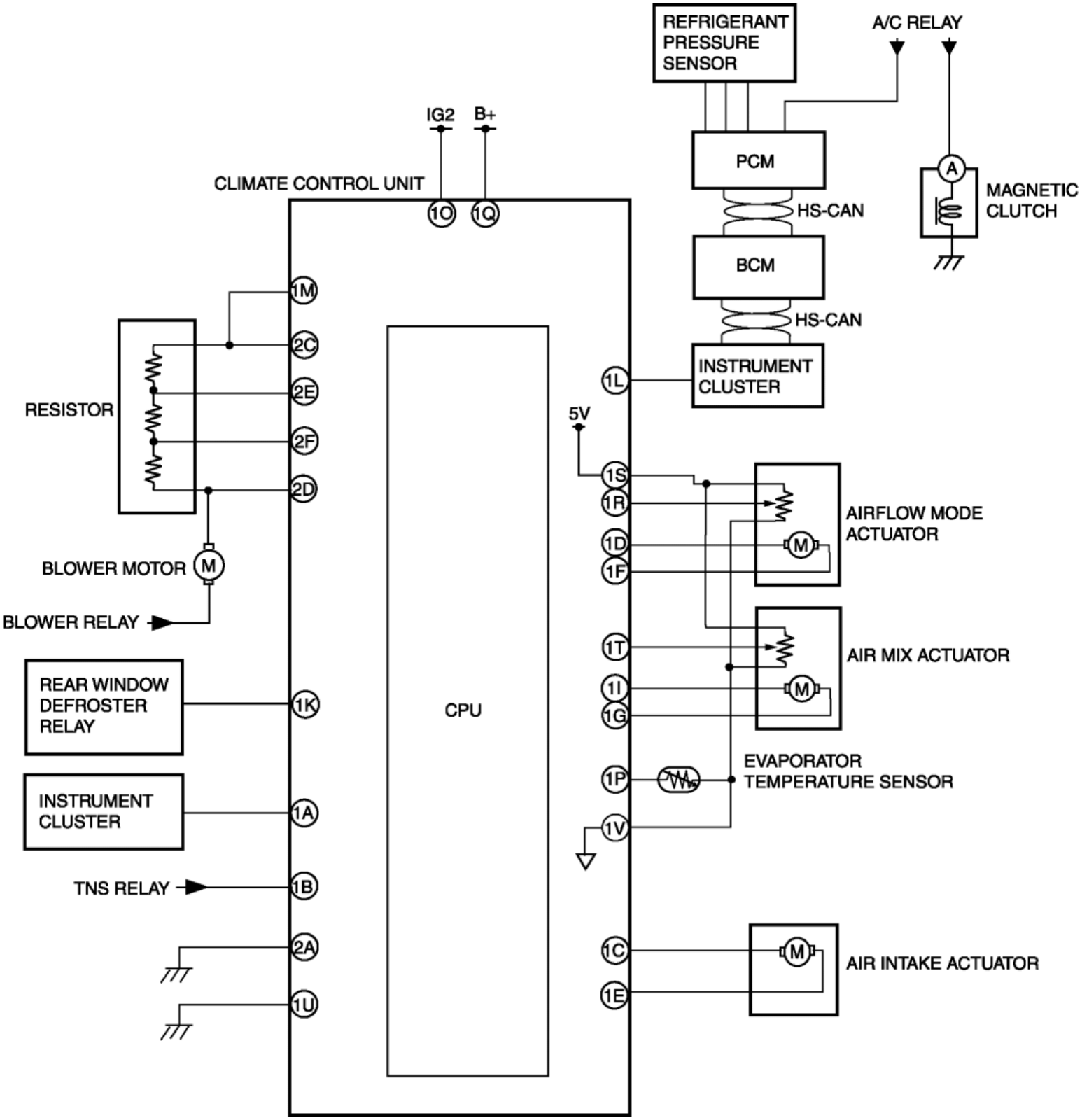

Back to Top

© 2011 Mazda North American Operations, U.S.A.

# 2012 - Mazda6 - HVAC

## HVAC SYSTEM WIRING DIAGRAM [MANUAL AIR CONDITIONER]

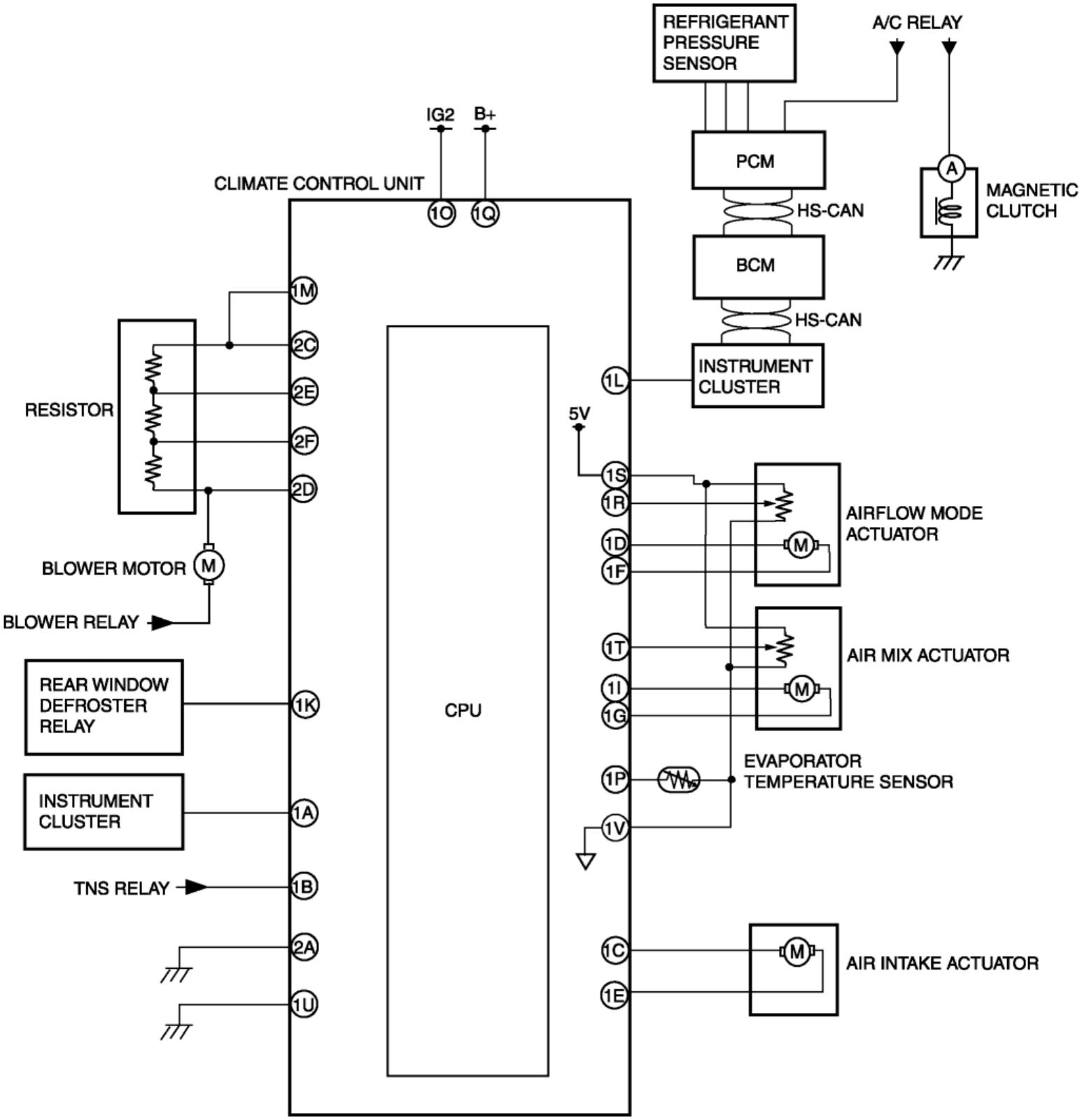

Back to Top

© 2011 Mazda North American Operations, U.S.A.