2012 - Mazda6 - HVAC

HVAC SYSTEM WIRING DIAGRAM [FULL-AUTO AIR CONDITIONER]

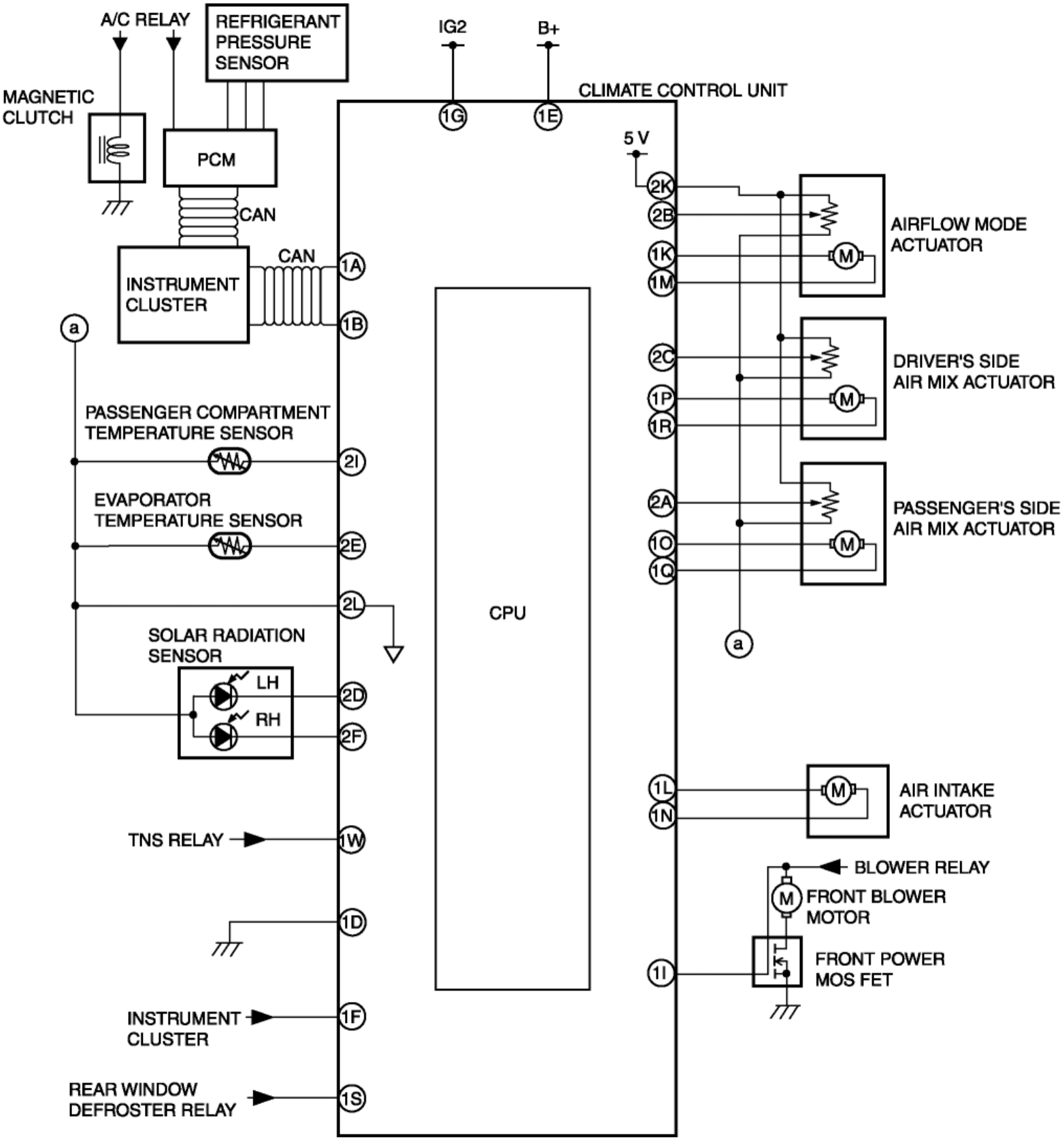

© 2011 Mazda North American Operations, U.S.A.

2012 - Mazda6 - HVAC

HVAC SYSTEM WIRING DIAGRAM [FULL-AUTO AIR CONDITIONER]

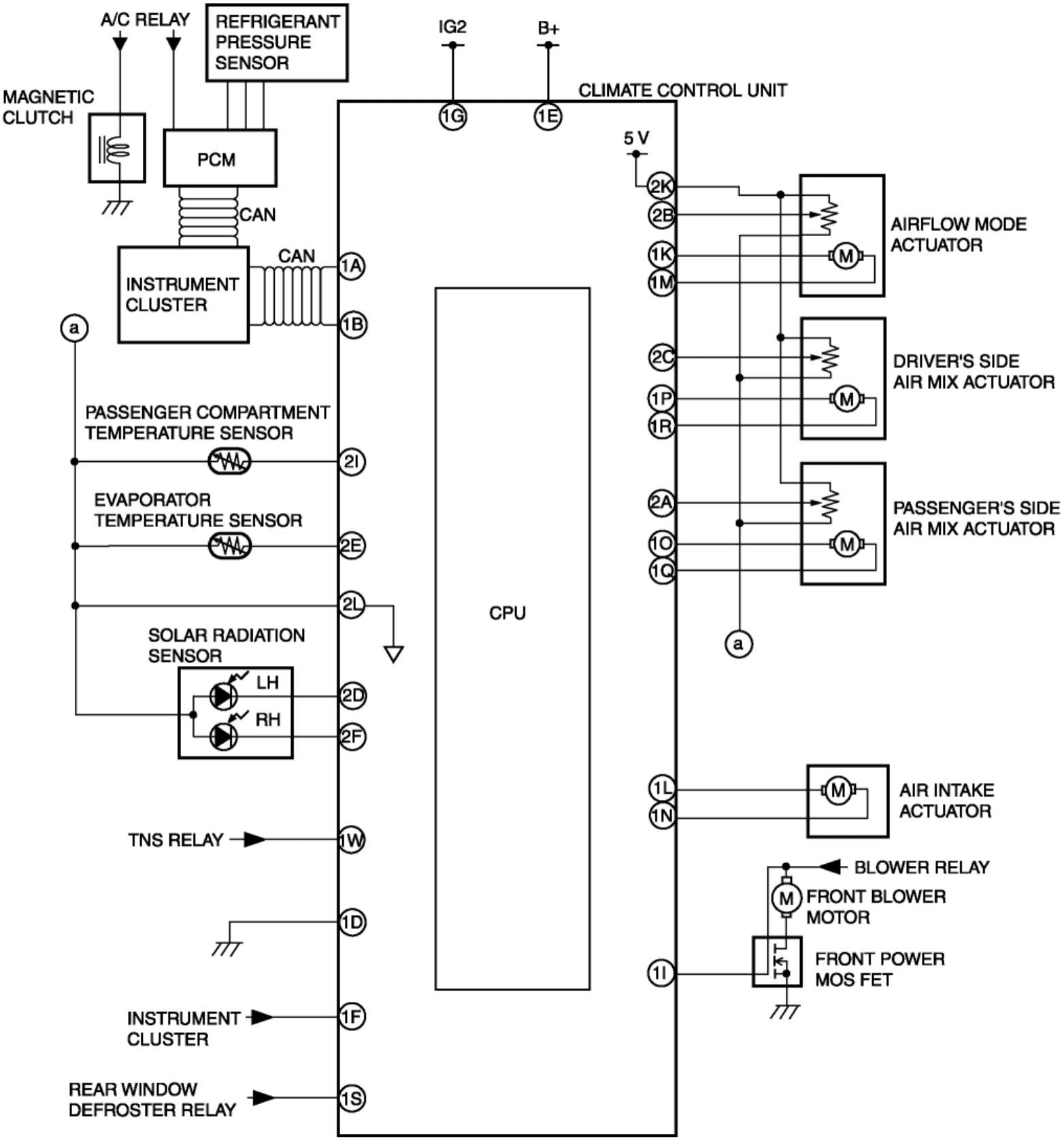

© 2011 Mazda North American Operations, U.S.A.